PEAD-RP Power Inverter Heat Pump

Ceiling Concealed Ducted System

- Reduced height - entire range now only 250mm
- Wider range of external static pressure settings across entire range
- Reduced noise levels thanks to the use of a newly designed centrifugal fan - as low as 23dBA
- Drain pump included as standard

R410A

Qualified for Energy Technology List

POWER INVERTER

Technical Information

PEAD-RP - INDOOR UNITS								
MODEL REFERENCE		PEAD-RP35JA	PEAD-RP50JA	PEAD-RP60JA	PEAD-RP71JA	PEAD-RP100JA	PEAD-RP125JA	PEAD-RP140JA
CAPACITY (kW)	Heating (nominal)	4.1 (1.6-5.2)	6.0 (2.5-7.3)	7.0 (2.8-8.2)	8.0 (3.5-10.2)	11.2 (4.5-14.0)	14.0 (5.0-16.0)	16.0 (5.7-18.0)
	Cooling (nominal)	3.6 (1.6-4.5)	5.0 (2.3-5.6)	6.0 (2.7-6.7)	7.1 (3.3-8.1)	10.0 (4.9-11.4)	12.5 (5.5-14.0)	14.0 (6.2-15.3)
	Heating (UK)	3.5 (1.35-4.4)	5.1 (2.15-6.2)	5.95 (2.4-6.95)	6.8 (3.0-8.65)	9.5 (3.85-11.9)	11.9 (4.25-13.6)	13.6 (4.85-15.3)
	Cooling (UK)	3.3 (1.45-4.15)	4.6 (2.1-5.15)	5.5 (2.5-6.15)	6.55 (3.05-7.45)	9.2 (4.5-10.5)	11.5 (5.05-12.9)	12.9 (5.7-14.1)
SHF (nominal)		0.85	0.84	0.83	0.83	0.82	0.84	0.83
COP / EER (nominal)		3.73 / 3.53	3.85 / 3.23	4.00 / 3.75	4.00 / 3.50	4.12 / 3.61	4.00 / 3.24	3.96 / 3.21
ENERGY LABEL	Heating/Cooling	A / A	A / A	A / A	A / A	A / A	A / A	A / A
AIRFLOW (m3/min)	Lo-Mi-Hi	10-12-14	12-14.5-17	14.5-18-21	17.5-21-25	24-29-34	29.5-33.5-42	32-39-46
PIPE SIZE mm(in)	Gas	12.7 (1/2")	12.7 (1/2")	15.88 (5/8")	15.88 (5/8")	15.88 (5/8")	15.88 (5/8")	15.88 (5/8")
	Liquid	6.35 (1/4")	6.35 (1/4")	9.52 (3/8")	9.52 (3/8")	9.52 (3/8")	9.52 (3/8")	9.52 (3/8")
EXTERNAL STATIC PRESSURE (Pa) Lo-Mi1-Mi2-Mi3-Hi		35-50-70-100-150	35-50-70-100-150	35-50-70-100-150	35-50-70-100-150	35-50-70-100-150	35-50-70-100-150	35-50-70-100-150
NOISE (dBA) (50Pa)	Lo-Mi-Hi	23-27-30	26-31-35	25-29-33	26-30-34	29-34-38	33-36-40	34-38-43
DIMENSIONS (mm)	Width	900	900	1100	1100	1400	1400	1600
	Depth	732	732	732	732	732	732	732
	Height	250	250	250	250	250	250	250
WEIGHT (kg)		26	28	33	33	41	43	47
ELECTRICAL SUPPLY		Fed by Outdoor Unit	Fed by Outdoor Unit	Fed by Outdoor Unit	Fed by Outdoor Unit	Fed by Outdoor Unit	Fed by Outdoor Unit	Fed by Outdoor Unit
PHASE		Single	Single	Single	Single	Single	Single	Single
FUSE RATING (BS88) - HRC (A)		6	6	6	6	6	6	6
INTERCONNECTING CABLE No. CORES		4	4	4	4	4	4	4

PUHZ-RP - OUTDOOR UNITS								
MODEL REFERENCE		PUHZ-RP35VHA4	PUHZ-RP50VHA4	PUHZ-RP60VHA4	PUHZ-RP71VHA4	PUHZ-RP100VKA/YKA	PUHZ-RP125VKA/YKA	PUHZ-RP140VKA/YKA
NOISE (dBA)	Heating/Cooling (silent)	46 / 44 (41)	46 / 44 (41)	48 / 47 (44)	48 / 47 (44)	51 / 49 (46)	52 / 50 (47)	52 / 50 (47)
WEIGHT (kg)		42	42	67	67	116 / 124	116 / 126	118 / 132
DIMENSIONS (mm)	Width	800	800	950	950	1050	1050	1050
	Depth	300 + 23	300 + 23	330 + 30	330 + 30	330 + 30	330 + 30	330 + 30
	Height	600	600	943	943	1338	1338	1338
ELECTRICAL SUPPLY		220-240v, 50Hz	220-240v, 50Hz	220-240v, 50Hz	220-240v, 50Hz	220-240v, 50Hz / 380-415,50Hz	220-240v, 50Hz / 380-415,50Hz	220-240v, 50Hz / 380-415,50Hz
PHASE		Single	Single	Single	Single	Single / 3	Single / 3	Single / 3
SYSTEM POWER INPUT (kW)	Heating/Cooling (nominal)	1.10 / 1.02	1.56 / 1.55	1.75 / 1.60	2.00 / 2.03	2.72 / 2.77	3.50 / 3.86	4.04 / 4.36
	Heating/Cooling (UK)	0.98 / 0.87	1.39 / 1.32	1.56 / 1.36	1.78 / 1.73	2.42 / 2.35	3.12 / 3.28	3.60 / 3.71
STARTING CURRENT (A)		5	5	5	5	5	5	5
SYSTEM RUNNING CURRENT (A) Single Phase		5.15 / 4.81 [14.1]	7.38 / 7.35 [14.4]	8.29 / 7.63 [20.6]	9.46 / 9.62 [21]	12.73 / 12.98 [29.2]	16.45 / 18.09 [29.3]	18.94 / 20.39 [30.8]
Heating/Cooling [MAX]	3 Phase	-	-	-	-	5.48 / 5.63 [10.7]	7.25 / 7.89 [12.3]	8.25 / 8.83 [13.8]
FUSE RATING (BS88) - HRC (A)		16	16	25	25	32 / 16	32 / 16	32 / 16
MAINS CABLE No. Cores		3	3	3	3	3 / 5	3 / 5	3 / 5
MAX PIPE LENGTH (m)		50	50	50	50	75	75	75
MAX HEIGHT DIFFERENCE (m)		30	30	30	30	30	30	30
CHARGE R410A (kg) - 30m		2.5	2.5	3.5	3.5	5.0	5.0	5.0

INDOOR UNIT PEAD-RP35-140JA

Front View >

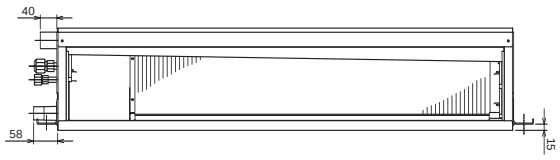

Upper View >

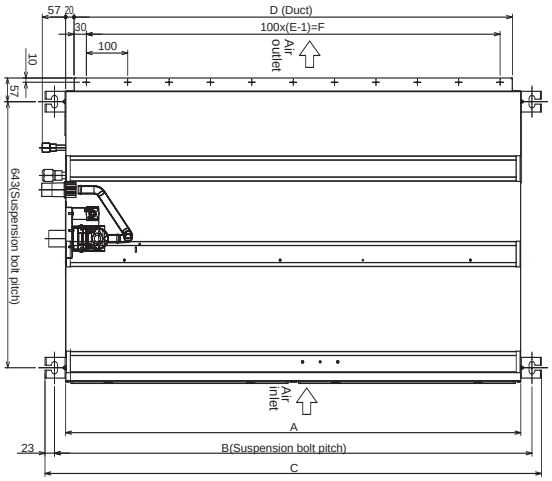

Rear View >

Side View >

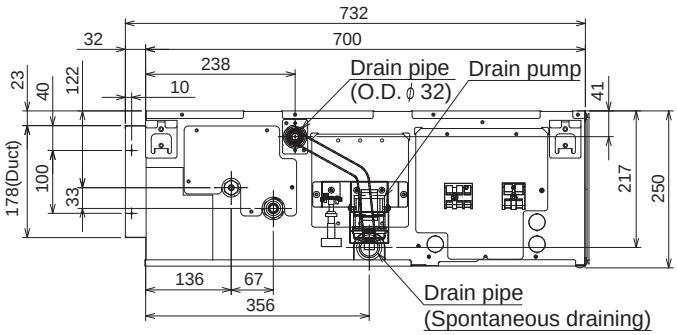

Model	A	B	C	D	E	F	G
PEAD-RP35-50JA	900	954	1000	860	9	800	858
PEAD-RP60-71JA	1100	1154	1200	1060	11	1000	1058
PEAD-RP100-125JA	1400	1454	1500	1360	14	1300	1358
PEAD-RP140JA	1600	1654	1700	1560	16	1500	1558