PLA-RP Zubadan Inverter Heat Pump

4-Way Blow Ceiling Cassette System

ZUBADAN

Zubadan sets a new standard in performance

The new Mr Slim Zubadan Inverter heat pumps achieve an excellent heating performance even when the outdoor air temperature is as low as -25°C.

- Stable Heating Performance - Full heating capacity at -15°C, a 30% capacity improvement over the next size up Power Inverter
- Expanded Heating Operation - Will work effectively even when the outdoor ambient air temperature is -25°C
- Stable Operation - Utilising the new Flash Injection Circuit the Zubadan models have reduced defrost times and can provide continuous heating for up to 150 mins
- Quick Start-Up - At -20°C, full heating capacity is achieved in about 20 mins, improving comfort levels

Technical Information

PLA-RP - INDOOR UNITS				
MODEL REFERENCE		PLA-RP71BA2	PLA-RP100BA3	PLA-RP125BA2
CAPACITY (kW)	Heating (nominal)	8.0 (4.5-10.2)	11.2 (4.5-14.0)	14.0 (5.0-16.0)
	Cooling (nominal)	7.1 (4.9-8.1)	10.0 (4.9-11.4)	12.5 (5.5-14.0)
	Heating (UK)	6.8 (3.85-8.65)	9.5 (3.85-11.9)	11.9 (4.25-13.6)
	Cooling (UK)	6.55 (4.5-7.45)	9.2 (4.5-10.5)	11.5 (5.05-12.9)
SHF (nominal)		0.73	0.74	0.71
COP / EER (nominal)	[3 Phase]	4.21 / 3.66	4.41 / 4.10 [4.31 / 4.00]	3.92 / 3.30
ENERGY LABEL	Heating/Cooling	A / A	A / A	A / A
AIRFLOW (m³/min)	Lo-Mi1-Mi2-Hi	14-16-18-21	20-23-26-30	22-25-28-31
PIPE SIZE mm(in)	Gas	15.88 (5/8")	15.88 (5/8")	15.88 (5/8")
	Liquid	9.52 (3/8")	9.52 (3/8")	9.52 (3/8")
NOISE (dBA)	Lo-Mi1-Mi2-Hi	28-30-32-34	32-34-37-40	34-36-39-41
DIMENSIONS (mm)	Width	840 (950)	840 (950)	840 (950)
(Grille)	Depth	840 (950)	840 (950)	840 (950)
	Height	258 (35)	298 (35)	298 (35)
WEIGHT (kg)	Unit	23	26	27
	Panel	6	6	6
ELECTRICAL SUPPLY		Fed by Outdoor Unit	Fed by Outdoor Unit	Fed by Outdoor Unit
PHASE		Single	Single	Single
FUSE RATING (BS88) - HRC (A)		6	6	6
INTERCONNECTING CABLE No. CORES		4	4	4
GRILLE REFERENCE		PLP-6BA	PLP-6BA	PLP-6BA
WIRED REMOTE CONTROLLER REFERENCE		PAR-21MAA	PAR-21MAA	PAR-21MAA

PUHZ-HRP - OUTDOOR UNITS				
MODEL REFERENCE		PUHZ-HRP71VHA2	PUHZ-HRP100VHA2/YHA2	PUHZ-HRP125YHA2
NOISE (dBA)	Heating/Cooling (silent)	52 / 51 (48)	52 / 51 (48)	52 / 51 (48)
WEIGHT (kg)		120	120 / 134	134
DIMENSIONS (mm)	Width	950	950	950
	Depth	330 + 30	330 + 30	330 + 30
	Height	1350	1350	1350
ELECTRICAL SUPPLY		220-240v, 50Hz	220-240v, 50Hz / 380-415,50Hz	380-415,50Hz
PHASE		Single	Single / 3	3
SYSTEM POWER INPUT (kW)	Heating/Cooling (nominal)	1.90 / 1.94	2.54 / 2.44 [2.60 / 2.50]	3.57 / 3.79
[3 Phase]	Heating/Cooling (UK)	1.69 / 1.65	2.26 / 2.07 [2.31 / 2.13]	3.18 / 3.22
STARTING CURRENT (A)		14	14 / 3	3
SYSTEM RUNNING CURRENT (A) Single Phase		8.76 / 8.89 [30]	11.76 / 11.26 [36]	-
Heating/Cooling [MAX]	3 Phase	-	4.86 / 4.69 [14]	6.37 / 6.70 [14]
FUSE RATING (BS88) - HRC (A)		32	40 / 16	16
MAINS CABLE No. Cores		3	3 / 5	5
MAX PIPE LENGTH (m)		75	75	75
MAX HEIGHT DIFFERENCE (m)		30	30	30
CHARGE R410A (kg) - 30m		5.5	5.5	5.5

INDOOR UNIT PLA-RP71-125BA(2)(3)

Upper View >

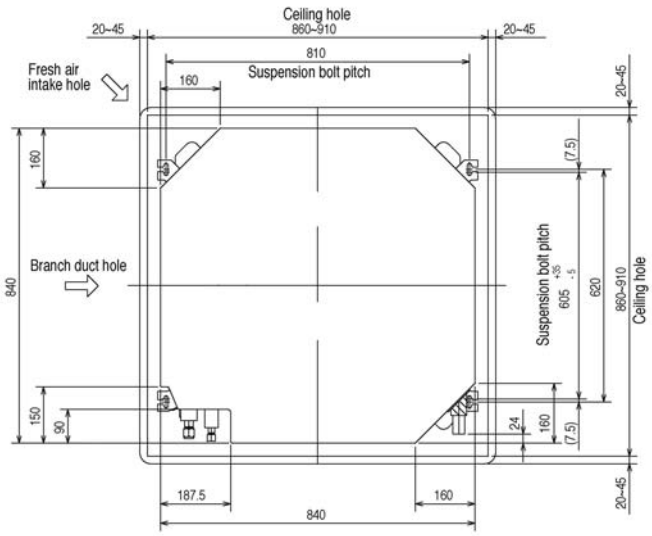

Lower View >

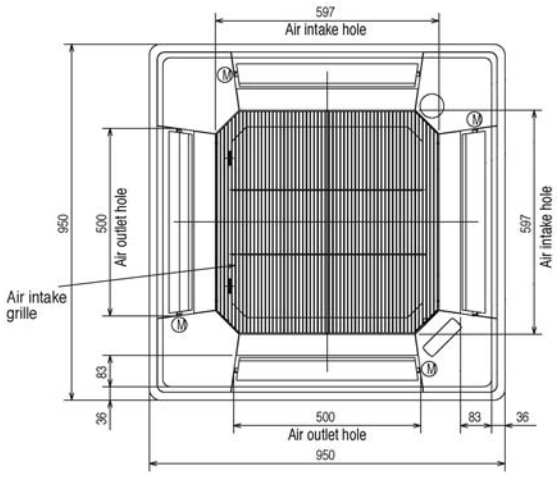

Side View >

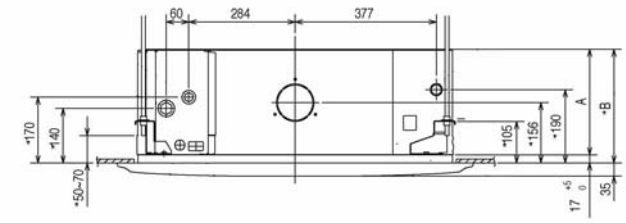

Models	A	B
Size 71	241	258
Size 100-125	281	298