PKFY-P-VBM-E/VHM-E/VKM-E

Wall Mounted Indoor Units

An elegant design combined with compact dimensions and quiet operation make the PKFY-P an ideal unit choice. Noise levels are significantly reduced thanks to a unique airflow passage design that not only makes the unit one of the quietest in the industry, but also suppresses condensation and prevents mixing with secondary air.

- Compact flat panel design - only 815mm wide (VBM-E)
- Front grille opening for easy cleaning
- Front power supply for easy wiring after installation
- 5-way piping provides more flexibility in selection of installation sites
- Now available in a size 15

Technical Information

PKFY-P-VBM-E /VHM-E /VKM-E - INDOOR UNIT

MODEL REFERENCE		PKFY-P15VBM-E	PKFY-P20VBM-E	PKFY-P25VBM-E	PKFY-P32VHM-E	PKFY-P40VHM-E	PKFY-P50VHM-E	PKFY-P63VKM-E
CAPACITY (kW)	Heating (nominal)	1.9	2.5	3.2	4.0	5.0	6.3	8.0
	Cooling (nominal)	1.7	2.2	2.8	3.6	4.5	5.6	7.1
	Heating (UK)	1.8	2.3	3.0	3.7	4.6	5.8	7.4
	Cooling (UK)	1.6	2.1	2.6	3.4	4.3	5.3	6.7
High Sensible	Cooling (UK)	1.2	1.6	2.0	2.6	3.3	4.1	5.2
SHF	(UK)	0.75	0.71	0.69	0.76	0.74	0.72	0.78
High Sensible	(UK)	0.83	0.75	0.80	0.85	0.82	0.78	0.85
POWER INPUT (kW)	Heating (nominal)	0.04	0.04	0.04	0.03	0.03	0.03	0.04
	Cooling (nominal)	0.04	0.04	0.04	0.04	0.04	0.04	0.05
AIRFLOW (m3/min)	Lo-Mi1-Mi2-Hi	4.9-5.0-5.2-5.3	4.9-5.2-5.6-5.9	4.9-5.2-5.6-5.9	9-10-11	9-10.5-11.5	9-10.5-12	16-20
NOISE (dBA)	Lo-Mi1-Mi2-Hi	29-31-32-33	29-31-34-36	29-31-34-36	34-37-41	34-38-41	34-39-43	39-45
WEIGHT (kg)		10	10	10	13	13	13	21
DIMENSIONS (mm)	Width	815	815	815	898	898	898	1170
	Depth	225	225	225	249	249	249	295
	Height	295	295	295	295	295	295	365
ELECTRICAL SUPPLY		220-240v, 50Hz	220-240v, 50Hz	220-240v, 50Hz	220-240v, 50Hz	220-240v, 50Hz	220-240v, 50Hz	220-240v, 50Hz
PHASE		Single	Single	Single	Single	Single	Single	Single
RUNNING CURRENT (A)	Heating	0.20	0.20	0.20	0.30	0.30	0.30	0.30
	Cooling	0.20	0.20	0.20	0.40	0.40	0.40	0.37
FUSE RATING (BS88) - HRC (A)		6	6	6	6	6	6	6
MAINS CABLE No. Cores		3	3	3	3	3	3	3

PKFY-P15, 20, 25VBM-E

Front View >

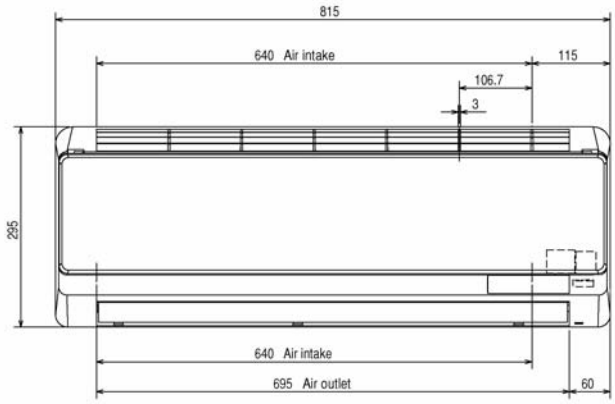

Right Side View >

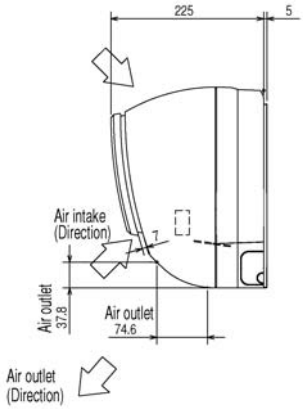

PKFY-P32, 40, 50VHM-E

Front View >

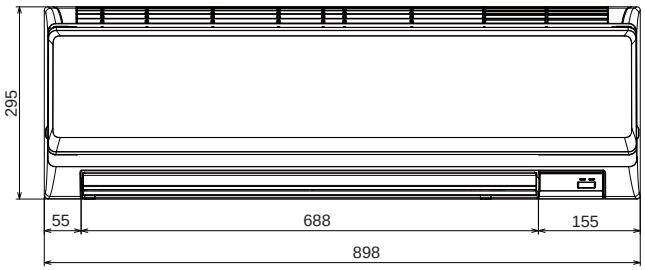

Right Side View >

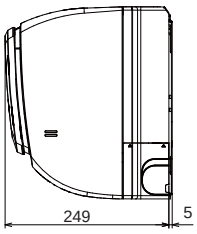

PKFY-P63VKM-E

Front View >

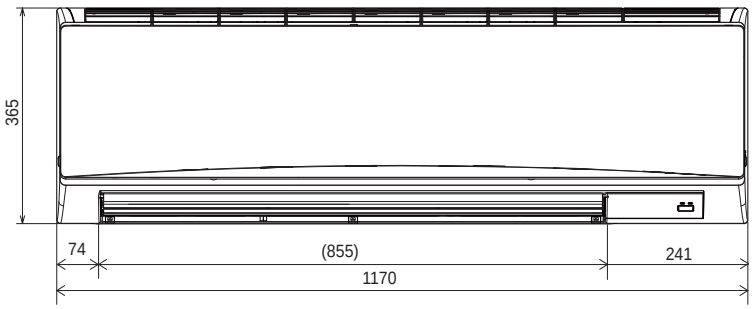
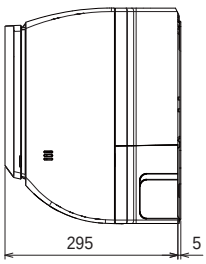
Right Side View >