PLFY-P-VCM-E

600x600 4-Way Blow Ceiling Cassette Indoor Unit

The compact size of this unit is ideal for 600x600mm ceilings and with a depth of 208mm, this lightweight unit makes installation a breeze. This unit also comes complete with a long life filter that will last for approximately 2,500 hours.

- Compact size for handy installation and easy maintenance
- Only 208mm high
- Fresh air duct facility

Technical Information

PLFY-P-VCM-E - INDOOR UNIT

MODEL REFERENCE		PLFY-P20VCM-E	PLFY-P25VCM-E	PLFY-P32VCM-E	PLFY-P40VCM-E
CAPACITY (kW)	Heating (nominal)	2.5	3.2	4.0	5.0
	Cooling (nominal)	2.2	2.8	3.6	4.5
	Heating (UK)	2.3	3.0	3.7	4.6
	Cooling (UK)	2.1	2.6	3.4	4.3
High Sensible	Cooling (UK)	1.6	2.0	2.6	3.3
SHF	(UK)	0.86	0.81	0.76	0.70
High Sensible	(UK)	1.00	0.90	0.85	0.76
POWER INPUT (kW)	Heating (nominal)	0.05	0.05	0.06	0.06
	Cooling (nominal)	0.05	0.05	0.06	0.06
AIRFLOW (m3/min)	Lo-Mi-Hi	8-9-10	8-9-10	8-9-11	8-9-11
NOISE (dBA)	Lo-Mi-Hi	28-31-35	28-31-37	29-33-38	30-34-39
WEIGHT (kg)	(Grille)	15.5(3)	15.5(3)	17(3)	17(3)
DIMENSIONS (mm) Width	(Grille)	570(650)	570(650)	570(650)	570(650)
	Depth (Grille)	570(650)	570(650)	570(650)	570(650)
	Height (Grille)	208(20)	208(20)	208(20)	208(20)
ELECTRICAL SUPPLY		220-240v, 50Hz	220-240v, 50Hz	220-240v, 50Hz	220-240v, 50Hz
PHASE		Single	Single	Single	Single
RUNNING CURRENT (A)	Heating	0.23	0.23	0.28	0.28
	Cooling	0.23	0.23	0.28	0.28
FUSE RATING (BS88) - HRC (A)		6	6	6	6
MAINS CABLE No. Cores		3	3	3	3
GRILLE MODEL REFERENCE		SLP-2AAW	SLP-2AAW	SLP-2AAW	SLP-2AAW

PLFY-P20, 25, 32, 40VCM-E

Lower View >

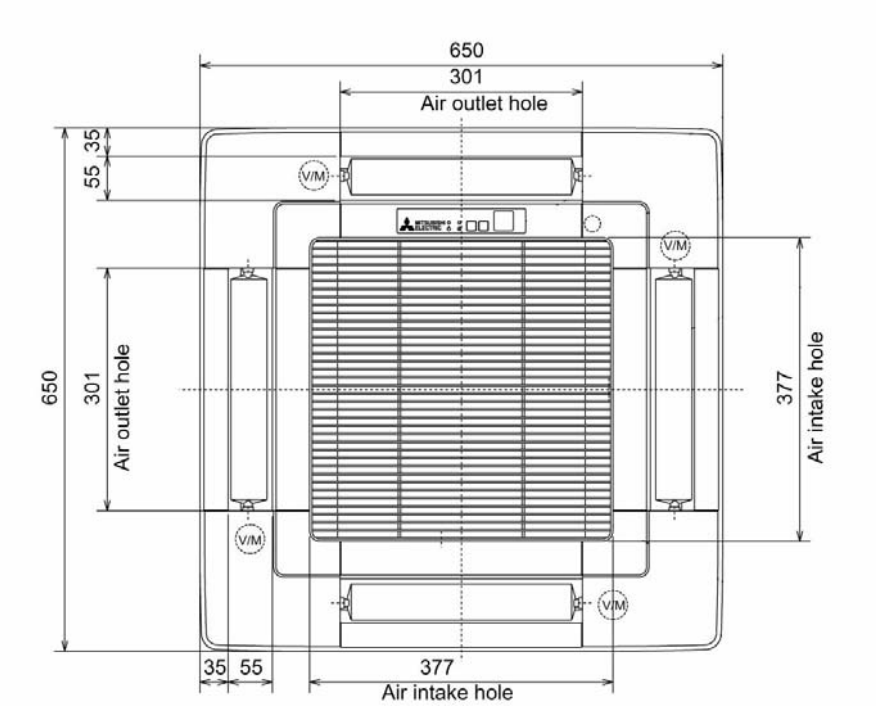
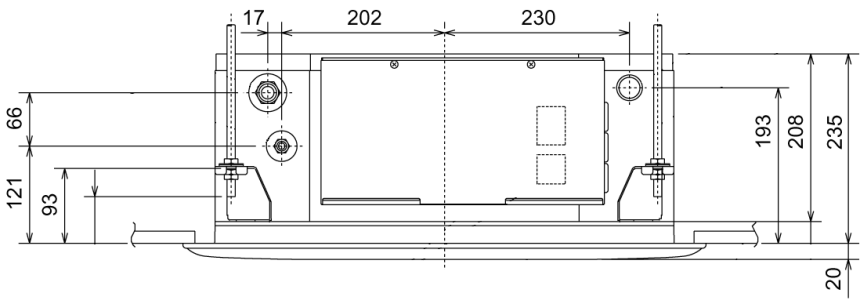
Side View >