Y Series (4-6hp)

Heat Pump Outdoor Unit

The latest in Mitsubishi Electric R410A Y Series technology. The new City Multi models allow up to 12 indoor units to be connected to a single outdoor unit, using the standard branch/header pipework system proven in the larger models. Utilising the latest Mitsubishi Electric inverter technology, the system is fully controllable with all City Multi controllers or linked to third party BEMS.

- A two core non-polar transmission line allows for simple installation of up to **twelve** indoor units now
- Latest in inverter technology including a highly efficient DC Scroll Compressor, DC fan motor and Demand Control
- The condensing unit is extremely slimline which allows easy location and application of the system
- Single or three phase power supply
- Anti-Corrosion blue and flat fin technology

Technical Information

Y SERIES OUTDOOR UNIT 4-6hp

MODEL REFERENCE		PUMY-P100VHMB	PUMY-P100YHMB	PUMY-P125VHMB	PUMY-P125YHMB	PUMY-P140VHMB	PUMY-P140YHMB
CAPACITY (kW)	Heating (nominal)	12.5	12.5	16.0	16.0	18.0	18.0
	Cooling (nominal)	11.2	11.2	14.0	14.0	15.5	15.5
	Heating (UK)	10.4	10.4	13.3	13.3	14.9	14.9
	Cooling (UK)	10.3	10.3	12.9	12.9	14.3	14.3
POWER INPUT (kW)	Heating (nominal)	3.66	3.63	4.33	4.29	5.58	5.32
	Cooling (nominal)	3.34	3.3	4.32	4.27	5.35	5.32
	Heating (UK)	3.27	3.23	3.85	3.82	4.99	4.73
	Cooling (UK)	2.84	2.81	3.66	3.63	4.53	4.52
COP / EER (nominal)		3.42 / 3.35	3.44 / 3.39	3.69 / 3.24	3.73 / 3.28	3.23 / 2.90	3.38 / 2.91
Max no. OF CONNECTABLE INDOOR UNITS		8	8	10	10	12	12
Max CONNECTABLE CAPACITY		50-130% OU Capacity	50-130% OU Capacity	50-130% OU Capacity	50-130% OU Capacity	50-130% OU Capacity	50-130% OU Capacity
AIRFLOW (m3/min)		100	100	100	100	100	100
PIPE SIZE mm(in)	Gas	15.88 (5/8")	15.88 (5/8")	15.88 (5/8")	15.88 (5/8")	15.88 (5/8")	15.88 (5/8")
	Liquid	9.52 (3/8")	9.52 (3/8")	9.52 (3/8")	9.52 (3/8")	9.52 (3/8")	9.52 (3/8")
NOISE (dBA)		49	49	50	50	51	51
WEIGHT (kg)		127	140	127	140	127	140
DIMENSIONS (mm)	Width	950	950	950	950	950	950
	Depth	330+30	330+30	330+30	330+30	330+30	330+30
	Height	1350	1350	1350	1350	1350	1350
ELECTRICAL SUPPLY		220-240v, 50Hz	380-415v, 50Hz	220-240v, 50Hz	380-415v, 50Hz	220-240v, 50Hz	380-415v, 50Hz
PHASE		Single	3	Single	3	Single	3
STARTING CURRENT (A)		5	5	5	5	5	5
RUNNING CURRENT (A)	Heating	15.5	5.32	18.3	6.29	23.6	7.8
	Cooling	14.1	4.84	18.3	6.26	22.7	7.8
GUARANTEED OPERATING RANGE	Cooling	-5°C ~ 46°C	-5°C ~ 46°C	-5°C ~ 46°C	-5°C ~ 46°C	-5°C ~ 46°C	-5°C ~ 46°C
	Heating	-15°C ~ 15°C	-15°C ~ 15°C	-15°C ~ 15°C	-15°C ~ 15°C	-15°C ~ 15°C	-15°C ~ 15°C
FUSE RATING (BS88) - HRC (A)		32	16	32	16	32	16
MAINS CABLE No. Cores		3	4 + earth	3	4 + earth	3	4 + earth

PUMY-P100-140VHMB/YHMB Piping Restrictions	
TOTAL PIPING LENGTH	120m max
FURTHEST PIPING LENGTH	80m max
FURTHEST PIPING LENGTH AFTER 1st BRANCH	30m max
BETWEEN INDOOR AND OUTDOOR UNITS - HEIGHT	50m max (20m max if outdoor installed below)
BETWEEN INDOOR AND INDOOR UNITS - HEIGHT	12m max

Optional Parts

Model Name	Description
CMY-Y62-G-E	Branch Pipe (2 Branch)

PUMY-P100-140VHMB/YHMB

Upper View >

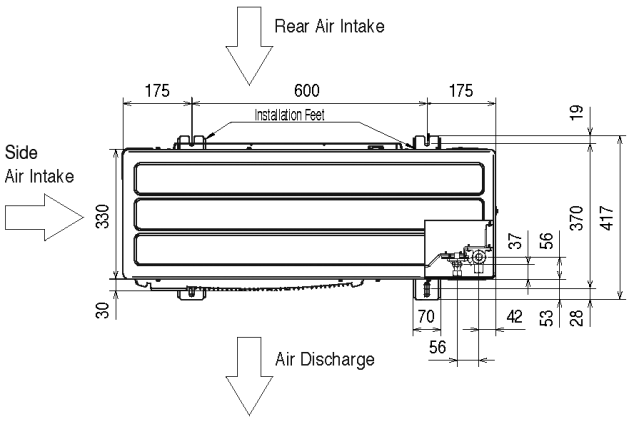

Side View >

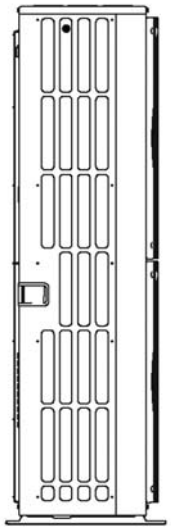
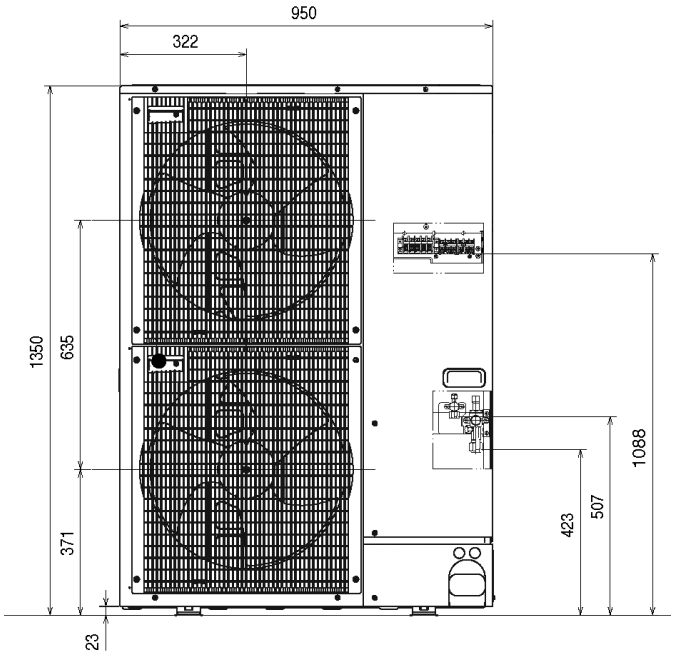
Front View >